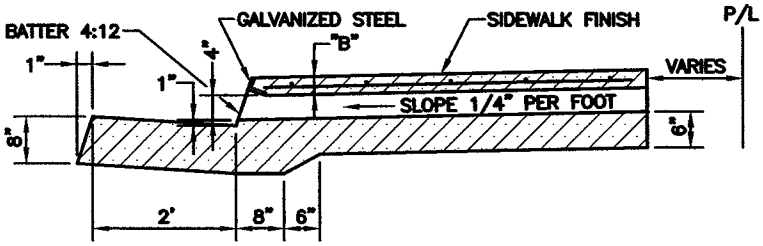

SECTION A–A

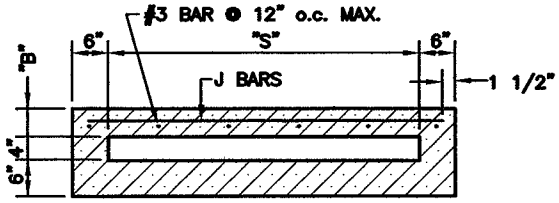

SECTION B–B

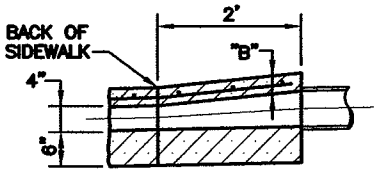

SECTION– INLET

(FOR PIPE LARGER THAN 4" DIA.)

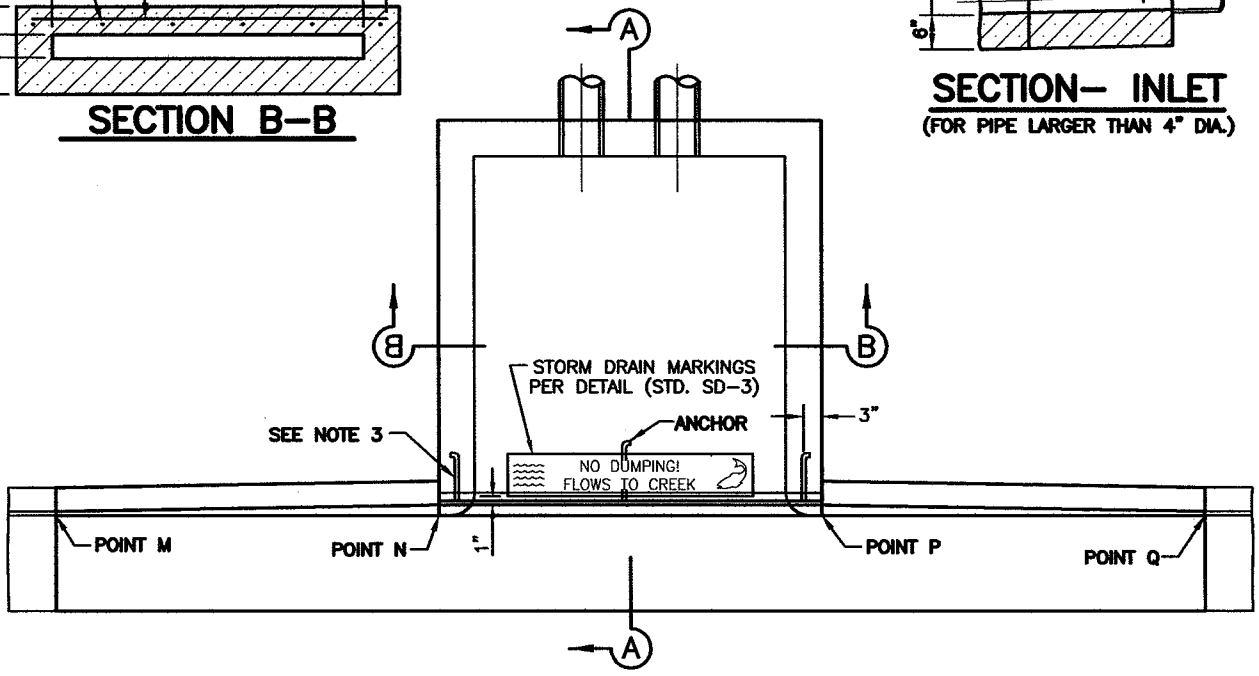

PLAN

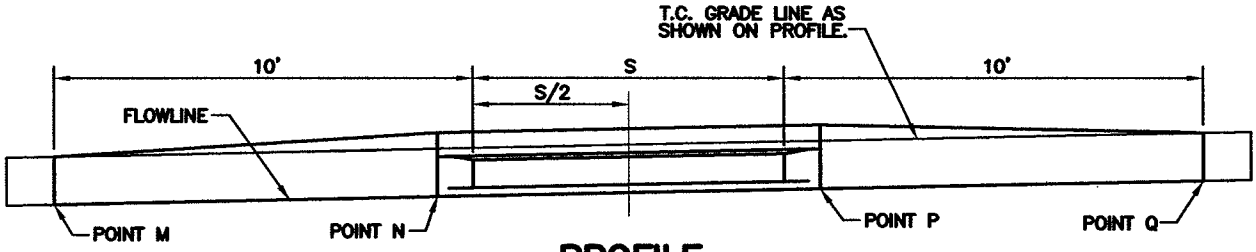

PROFILE

STEEL LIST

S	B	GALVANIZED STEEL ANGLE	J BAR		
			ANCHOR	SPACING	LENGTH
1'–0"	3"	2 1/1" x 2" x 3/8"	2	7"	1'–9"
1'–6"	"	"	"	"	2'–3"
2'–0"	"	"	"	"	2'–9"
2'–6"	"	"	"	"	3'–3"
3'–0"	"	"	3	"	3'–9"

NOTES:

1. FLOOR OF BOX TO BE TROWELED SMOOTH.
2. TOP OF INLET STRUCTURE TO BE FLUSH WITH ADJACENT SURFACE WHERE PRACTICABLE.
3. A HEADED STEEL ROD 1/2" x 6" WITH 1" DIA. HEAD ATTACHED BY A FULL PENETRATION BUTT WELD MAY BE USED AS AN ALTERNATE ANCHOR.
4. NORMAL CURB FACE AT POINT M & Q, B+5" AT POINTS P & N.

ENGINEERING DEPARTMENT — CITY OF MERCED, CA.

ALTERNATE CURB DRAIN

DRAWN: KGE
DATE: 7/07
REVISED: 3/17/08

APPROVED BY: David L. Tucker — CITY ENGINEER — DATE 3/17/08

SD–6

SHEET OF